ON-LINE GAS/LIQUID CHROMATOGRAPHY APPLICATIONS
NATURAL GAS PROCESSING C2+ FRACTIONATION

Daniel on-line chromatographs can improve process control by providing measured results of composition in NGL fractionation facilities. In many smaller gas processing plants hydrocarbon liquids are removed in a cryogenic plant. Raw untreated gas is produced from a field gathering system into a gas processing facility. The first stage in processing this raw gas is inlet separation to remove water from the hydrocarbons. Following inlet separation is a cryogenic unit containing a single fractionation tower called a demethanizer. The demethanizer produces C2+ as a bottoms product and residue (sales gas) as the overhead product. In larger plants that contain additional NGL fractionation facilities to produce spec ethane propane, butanes and natural gasoline the bottoms product from a demethanizer would become the inlet feed to a deethanizer.

Demethanizer Example

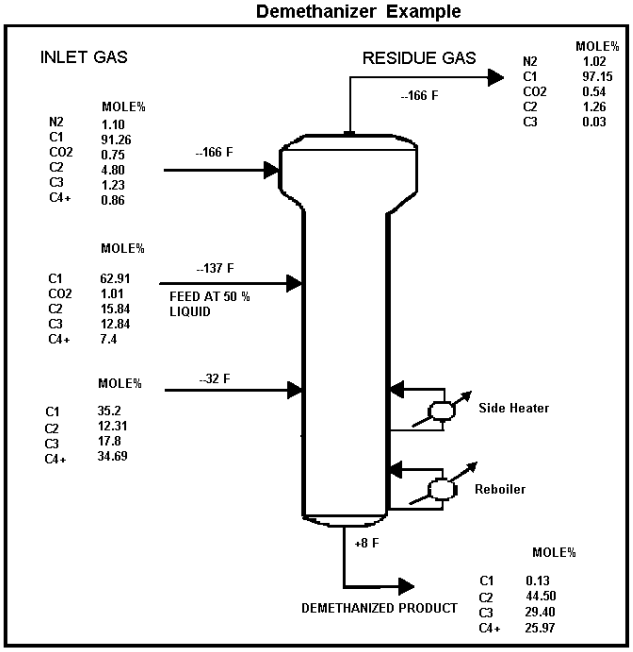

The Sample System

Stream Switching

The multi stream sample system must be designed to eliminate all possibilities of cross-stream contamination. Once the sample has been filtered, pressure regulated to about 2-20 psig and heated to maintain a single-phase sample, stream switching can occur. The following drawing illustrates a solenoid purge design for switching streams of similar composition. This design is preferred by Daniel over double block & bleed designs to ensure that cross-stream contamination does not occur in multi-stream sample systems. As with double block & bleed cross stream contamination usually can occurs when solenoids leak. This allows other streams to mix with selected streams. Solenoid purge ensures that other stream solenoids are purged with a split flow from the selected stream. These leaks are carried away from the sample valve through the solenoid purge vent. This design uses half the number of solenoids to accomplish the same result as double block and bleed.

The operation is as follows:

1-The selected stream energizes its solenoid to allow sample flow from the normally closed (N/C) port to the common (C) port (selected stream). A split in the flow occurs allowing the sample to flow in two directions. The first path flows upward to the sample valve for analysis.

2-The second path flows from C to normally open (N/O) on the other stream solenoids to carry potential leaks from these stream select solenoids away from the selected stream flowing to the sample valve.

3-The solenoid purge vent carries the purge flow from the sample system to a low-pressure return point in the process. Each stream must be vapor-phase and pressure balanced up to the stream select solenoids

The calibration standard uses a single block to conserve valuable calibration gas. In addition, it is assumed that calibration gas is similar in composition to the selected stream and potential leaks will not seriously bias the results.

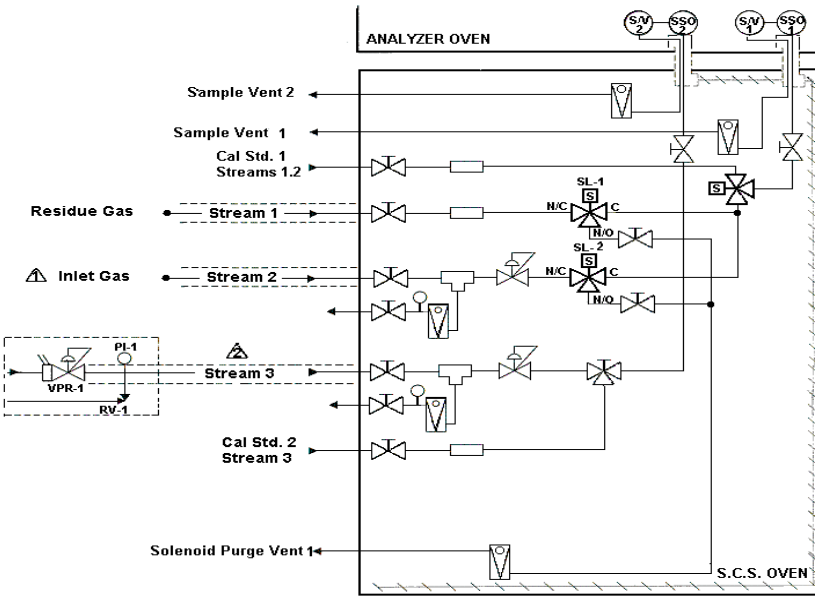

Dual Sample Valves

Light natural gas streams can adequately purge common tubing and sample valves in a reasonable amount of time. This ensures that when the next stream in sequence is ready for sample injection the sample loop will contain a continuous flowing stream representative of the sample from the process. When several streams share common tubing adequate time is required to ensure proper purging of previous sample remnants. A problem can occur in this application however if a lighter natural gas stream is selected for analysis after a heavy liquids stream. The lighter molecules require a great deal more time to adequately purge the heavier molecules from common tubing and sample valves. The use of dual sample valves eliminates this potential cross-stream contamination and allows liquids and gases to be measured properly within a single GC. The only section of common tubing is in the columns after sample injection. This section of common tubing is not a concern because the back-flush operation, inherent in all Daniel applications, ensures that downstream columns, valves and detectors are completely purged of previous sample remnants upon completion of the current analysis.